HALO Gen 2
Recessed Self-Test Downlight

VENTILUX
Lighting the path to safety together

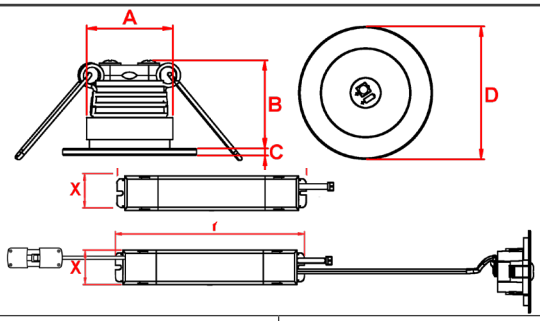

Order Code	**HA2NM3/LED/ST**
Mode of operation	Non-Maintained Self-Test
DALI Interface	For Controlled Monitoring and Reporting
Emergency duration	3 hours
Input voltage	230/240V (207VAC - 264VAC) 50/60Hz
Power consumption	2VA, I_{nom} = 8mA (Full Battery)
Battery type	Rechargeable LiFePO4 Battery 3.2V 3.6Ah
Battery low voltage cut off	2.6V DC
Battery discharge current @ 3.2V DC	0.67A
Lamp	3 Watt
Lamp colour	6000K
Lamp lumen level in emergency	230 lm
Nominal lamp voltage	V_{rated} = 3V DC
Nominal lamp current	I_{rated} = 0.53A CC
Nominal lamp power	P_{rated} = 2W
Maximum output voltage with no lamp connected	U-OUT = 10VDC
Ingress Protection	IP40
Cut-Out	38mm*
Minimum Ceiling Void (From top of Ceiling Surface)	200mm Ceiling Void
Maximum Ceiling Surface Thickness	18mm
Cable entry	Recessed Pack
Incoming DALI Comms cable size cross sectional area	1 x 1.5mm² single conductor
Luminaire class	Class II
Product Weight	0.65 Kg
Packaging Weight	0.051 Kg
Standards	EN61347-2-7, EN61347-2-13, EN 60598-2-22, EN 55015
Environment	0°C to 45°C up to 80% relative humidity.

230 Lumens | 3 Watts | 6000K | Recessed Mounting

LiFePO4 Battery | Class II | IP 40 | 6Y Warranty

Materials

Lamp Head: Spun Aluminium
Remote Pack: Flame Retardant ABS

Standard Colour: White - RAL 9016
Alternative Colours Available Upon Request

Warranty

Standard Warranty: 6 Years
Alternative Warranty: 10 Years
Add /10 Years to Order Code

System	Order Code	Mode of Operation	Battery	Battery P/N	Lumens (Emergency)	Dimensions (mm)					
						A	B	C	D	X	Y
Self-Test*	**HA2NM3/LED/ST**	**Non-Maintained**	**3.2V, 3.6Ah LiFePO4**	**70268**	**230**	**29**	**31**	**2.4**	**45**	**36**	**196**
Alternative Systems Available: Specification Sheets Available Upon Request											
Standalone	HA2NM3/LED	Non-Maintained	6.4V, 1.5Ah LiFePO4	70267	230	29	31	2.4	45	28	196
DALI*	HA2NM3/LED/DA	Non-Maintained	3.2V, 3.6Ah LiFePO4	70268	230	29	31	2.4	45	36	196
Central Battery*	ZHALED3W230S	Slave	-	-	300	29	31	2.4	45	50	220
DALI Central Battery*	ZHALED3W230SDA	Slave	-	-	300	29	31	2.4	45	56	200

Photometrics

Mounting Height	Lighting level directly under Luminaire (Lux)	↔		↔	
		Luminaire Spacing (Metres)			
		0.5lx	1.0lx	0.5lx	1.0lx
2.5m	43.77	3.4	3.0	7.7	6.8
2.7m	37.53	3.5	3.2	8.1	7.0
3m	30.40	3.8	3.4	8.7	7.6
4m	17.11	4.6	4.1	10.2	9.2
6m	7.60	6.1	5.4	13.5	12.1
8m	4.28	7.3	6.0	16.5	14.7
10m	2.74	8.2	5.8	19.2	16.5

*Please Note: The Remote Pack will not fit through 38mm Cut-out. Ensure Alternative Access into the Ceiling Void is Available.

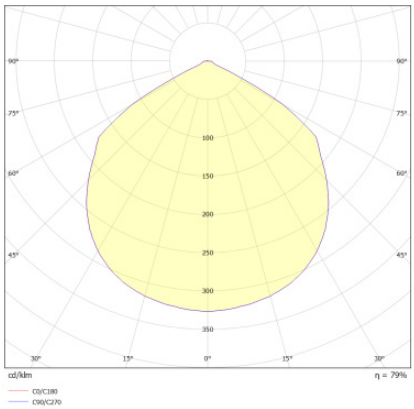

We adopt a policy of continuous product and services improvement and we reserve the right to vary details without prior notice
For Warranty Terms please visit the Ventilux website